ELVEFLOW
PLUG & PLAY MICROFLUIDICS
an **ELVESYS** brand

Oil in water droplet

Experiment report

EXPERIMENT: Oil-in-water droplet generation
CHIP: Little Things Factory, model T27

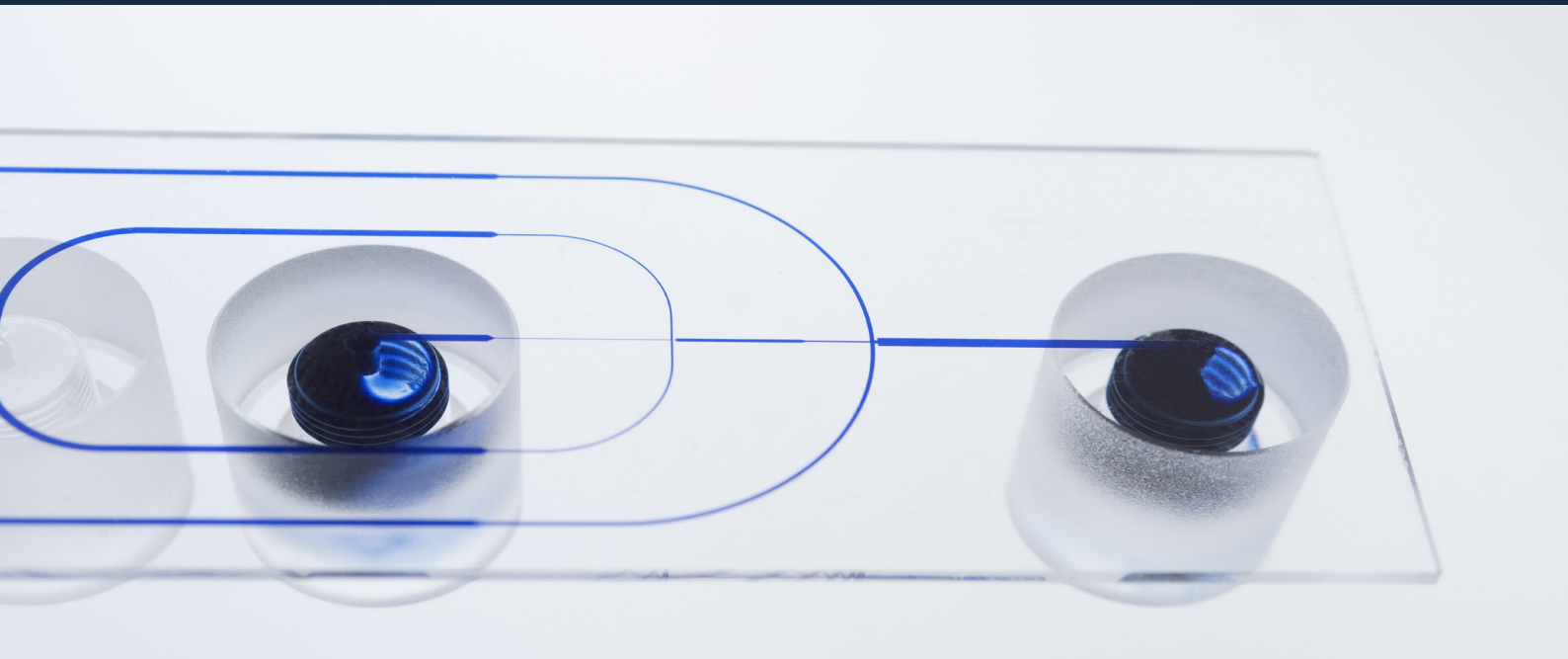

CONTENT OF THE DROPLET PACK

- 1 Pressure Controller OB1 (MK3+)
  2 channels, 2 bars
- 1 Pressure Source Quick Connection Microfluidic Kit
- 1 Fittings Luer Lock Kit
- 1 Little Things Factory chip — Model T27
- 2 Flow Sensors — MFS3, MFS4
  With OB1 connection cables
  MFS3 [0;80 µl/min] — MFS4 [0;1000 µl/min]
- 1 ESI Elveflow Software (last version available on our website)
- 1 Tygon air tubing 7/32" OD 3/32" ID — 2*50cm
- 13 1/4"-28 Fittings
- 1 Tubing 1/32" OD — 1m
- 2 15 mL reservoirs
  With Microfluidic Caps
- 1 DB Oil — 5 mL
- 1 Water — 40 mL

If you have any questions, please contact us at contact@elveflow.com

DESIGN OF THE PDMS CHIP

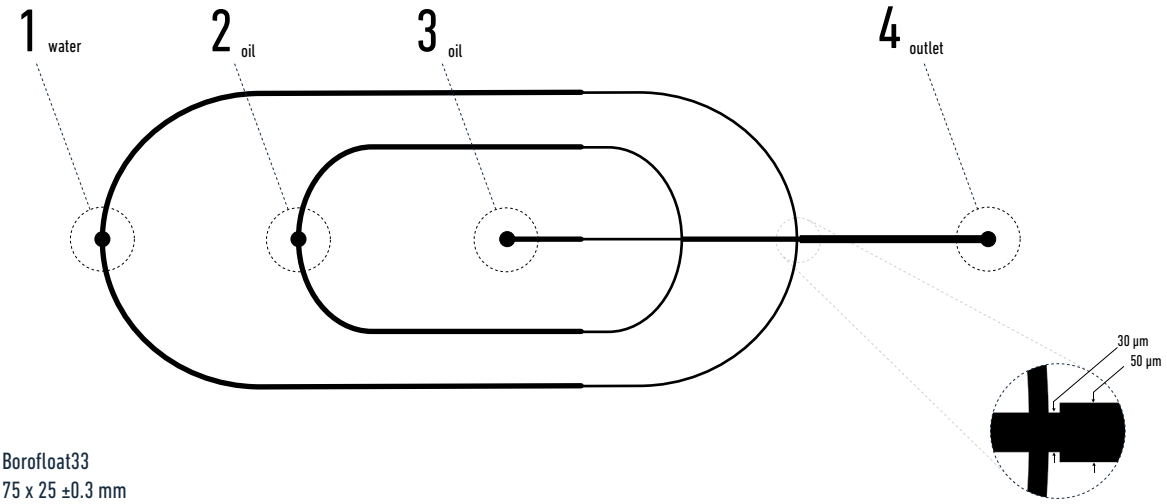

CHIP FEATURES

Material:	Borofloat33
Dimension:	75 x 25 ±0.3 mm
Thickness:	1 ±0.1 mm
Layer 1:	Thickness 0.5 mm (bores and structure; channel depth: 50µm)
Layer 2:	Thickness 0.5 mm (blank)
Internal Volume:	3.3 µL

PRINCIPLE

With two cross intersections, the chip allows to produce double layer droplets as well as simple layer droplets (by putting miscible solutions in input 2 and 3). Made of full hydrophilic glass, droplets can only be produced as hydrophobic droplets (first or only layer if double or simple droplet) in hydrophilic fluid (oil-in-water for example). Otherwise, a coating liquid can be applied inside to the surfaces inside the chip, in order to reverse the behaviour of the chip, making possible hydrophilic droplet in hydrophobic liquid.

DROPLETS' SIZE/PRESSURE DIAGRAM

Choose your input pressure for oil and water to have the droplet size you want

Droplet diameters in µm

The droplet diameter is limited from 62 µm to 254 µm. Find table with droplet visualization in page 5.

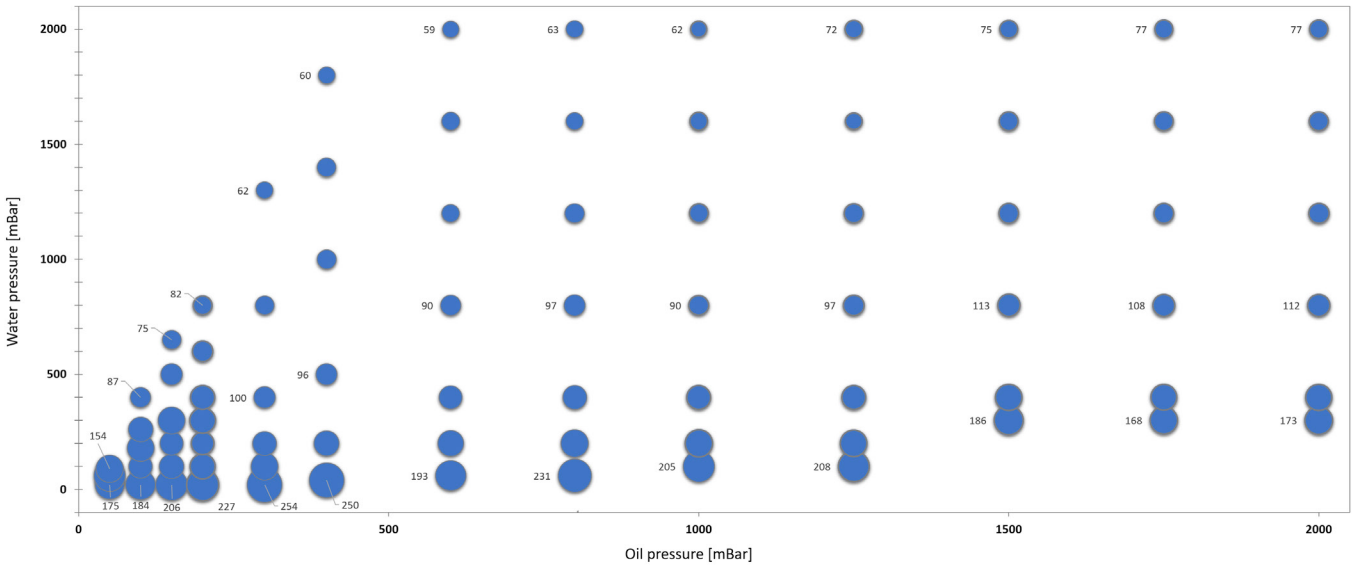

OIL PRESSURE mBar	50	100	150	200	300	400	600	800	1,000	1,250	1,500	1,750	2,000
Droplet Throughput Interval s^{-1}	[0.12 ; 2.8]	[0.27 ; 8]	[0.5 ; 7]	[0.9 ; 16]	[1.6 ; 7]	[3 ; 7]	[5 ; 22]	[10 ; 50]	[14 ; 65]	[20 ; 100]	[25 ; 150]	[25 ; 150]	[25 ; 150]

SETUP

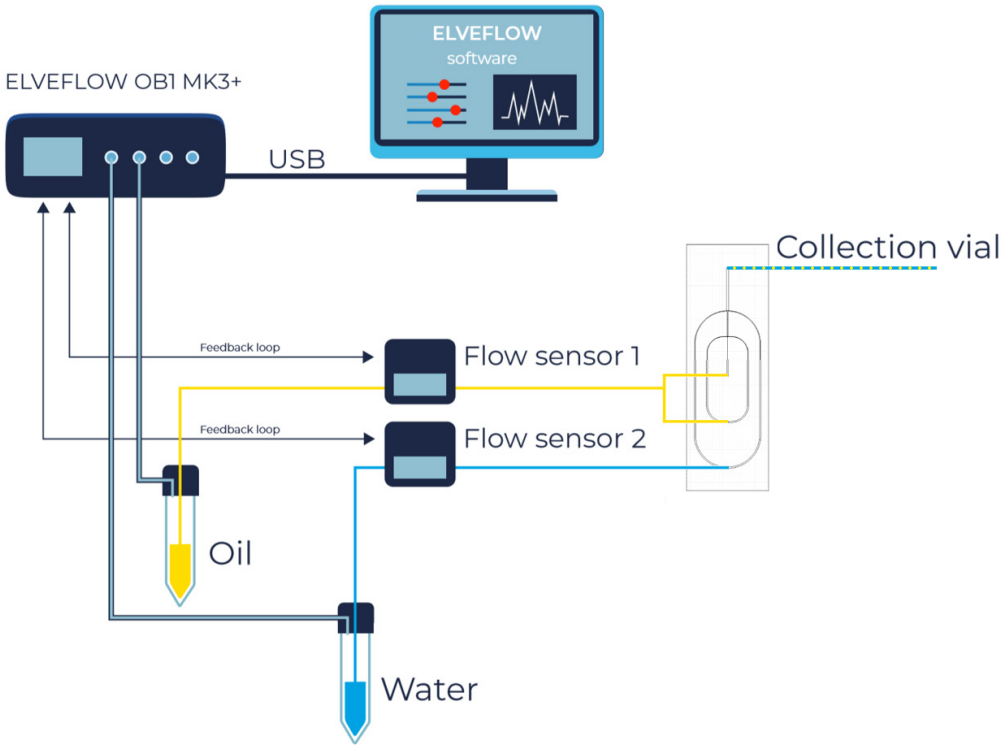

QUICK START GUIDE

Step 1

Connect your OB1 pressure controller to external pressure supply using pneumatic tubing and to computer using USB cable

For detailed instructions on OB1 pressure controller setup, please read OB1 user guide

Step 2

Fill your microfluidic tanks with dispersed (water) and continuous phase (oil).

Step 3

Plug microfluidic tanks to the OB1 pressure controller outlet. The Elveflow reservoirs connection instructions are covered by a specific guide (see Elveflow Microfluidic reservoirs assembly Instructions).

Step 4

If you bought flow sensors, connect them to OB1 for the feedback loop and between microfluidic tanks and chip for flow measurements.

Step
5

Turn on the OB1 by pressing power switch on the front side of the instrument.

Step
6

Launch Elveflow software. The Elveflow Smart Interface's main features and options are covered by Smart Interface's guide.

Please refer to those guides for a detailed description.

Step
7

Press Add Instrument \ Choose OB1 \ set as MK3+, set pressure channels if needed, give name for the instrument and press OK to save changes.

Your OB1 now should be in the list of recognized devices.

Step
8

Add flow sensor: press Add Sensor \ select Flow Sensor \ analog/digital \ max flow rate for the sensor, give the name for the sensor, select to which device and channel sensor is connected and press OK to save the changes.

For details refer to Microfluidic Flow Sensor User Guide.

Step
9

Use the supplied 1/32" OD tubing to connect microfluidic tanks with the chip.

Step
10

Set pressures (and other parameters if needed) and start pumping liquids into the chip.
Wait until all air bubbles escape from the chip and both liquids are flowing.

Change the pressure of water and oil channels to start generating droplets. Their size and frequency will depend on the pressure, flow rate and viscosity of the liquids used.

TIPS AND TRICKS

- **Fill the chip first with the continuous phase** and make sure that it does not fill the channel of the dispersed phase by adding then the dispersed phase, using pressures balancing.
- **Make sure** that the output tube from the chip plunges in the liquid of the collection vial to avoid dripping, destabilizing flow rates
- As the chip has been produced using sand-blasting, the bottom of the **channels** appears with **grains-looking** with microscope observation. To better see the droplets at high throughput, reduce time exposure and increase microscope light intensity.

DROPLETS' SIZE/PRESSURE TABLE

Oil pressure [mbar]	Water pressure [mbar]	Droplet diameter [µm]	Droplet visualization
50	20	175	
50	60	206	
50	90	154	
75	20	184	
75	120	168	
75	200	128	
100	20	184	
100	140	164	
100	400	87	
150	20	206	
150	200	114	
150	650	75	
200	20	227	
200	200	117	

Oil pressure [mbar]	Water pressure [mbar]	Droplet diameter [µm]	Droplet visualization
200	800	82	
300	20	254	
300	200	121	
300	1300	62	
400	40	250	
400	500	96	
400	1800	60	
600	60	193	
600	600	97	
600	2000	59	
800	60	231	
800	600	102	
800	2000	63	
1000	100	205	

Oil pressure [mbar]	Water pressure [mbar]	Droplet diameter [µm]	Droplet visualization
1000	800	90	
1000	2000	62	
1250	100	208	
1250	800	97	
1250	2000	72	
1500	300	186	
1500	1000	107	
1500	2000	75	
1750	300	168	
1750	1000	98	
1750	2000	77	
2000	300	173	
2000	1000	108	
2000	2000	77